MODEL 460
BULK HANDLING CONVEYOR

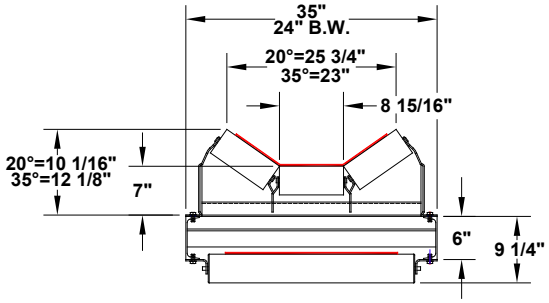

Typical Cross Section

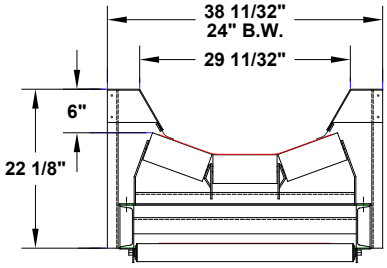

Typical Cross Section
With Optional Siderail

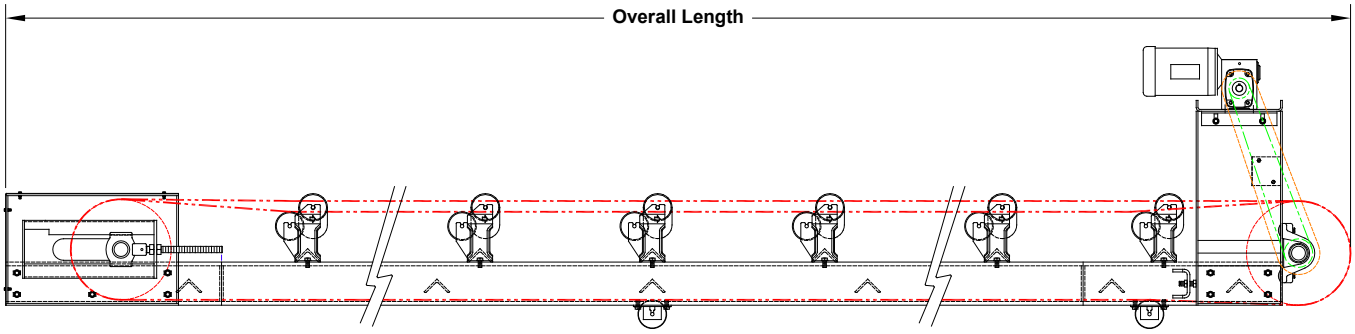

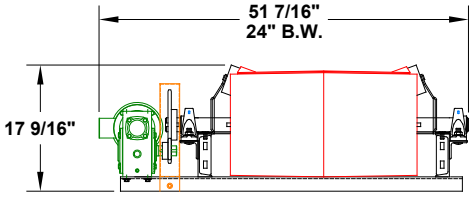

Side Mount Drive

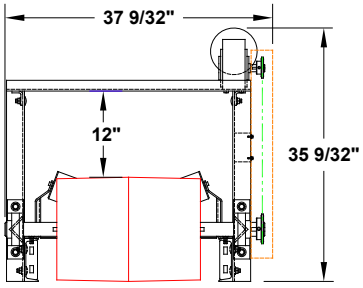

Top Mount Drive

TITAN™ INDUSTRIES, INC.

735 Industrial Loop Road • New London, WI 54961-9612 • 920-982-6600 • Fax 920-982-7750 • (Outside Wisconsin) 800-558-3616
Website: www.titanconveyors.com • Email: sales@titanconveyors.com

Bulletin 0509 460GH

TITAN™ INDUSTRIES, INC.

MODEL 460

BULK HANDLING CONVEYOR

The Model 460 Bulk Handling Conveyor is specifically designed to handle large volumes of heavy, abrasive and granular products at a very reasonable cost. The Model 460's rugged construction and certified components provide for long runs and outdoor applications. Carrying 3 roll idlers are spaced on 4' centers in the intermediate section and spaced closer at each terminal. Infeed hoppers, skirting, belt scraper and supports are some of the available options.

MODEL 460
SPECIFICATIONS

DRIVE:.....1 H.P. 230/460/3/60
BELT SPEED:..... 100 F.P.M.
BELT: .....2 Ply Nylon
FRAME: .....6" Structural Channel
PULLEYS: .....14" Diameter Crown Face Rubber Lagged Drive
14" Diameter Crown Face Take-up
IDLERS:.....3 Roll CEMA Approved
(4" Diameter at 20°)
PAINT:..... One Coat Industrial Enamel

NOTE: Specifications subject to change without notice